SIEMENS
Ingenuity for life

A Case Study on Aggregate Load Modeling in Transient Stability Studies

Presented by: Daniel Feltes – Siemens PTI

Coauthors: Carlos Grande-Moran, Bernardo Fernandes, James Feltes, Ming Wu and Robert Wells

Overview

Discussion on practical applications of detailed load models in transient stability analyses, including:

- Fault Induced Delayed Voltage Recovery (FIDVR)
- Transient Voltage Response Criteria
- Load Models
- Typical Model Parameters
- Case Study
- Next Generation of Load Models
- Conclusions and Recommendations

Fault Induced Delayed Voltage Recovery (FIDVR)

NERC defines FIDVR as a voltage condition initiated by a fault and characterized by:

- Stalling of induction motors
- Post-contingency voltage recovery to less than 90 percent of pre-contingency voltage
- Slow recovery (more than two seconds) to post-contingency voltage levels

FIDVR is caused or aggravated by large amounts of single phase air conditioners.

This type of load plays a main role in FIDVR because of its low inertia and proneness to stall

Fault Induced Delayed Voltage Recovery (FIDVR)

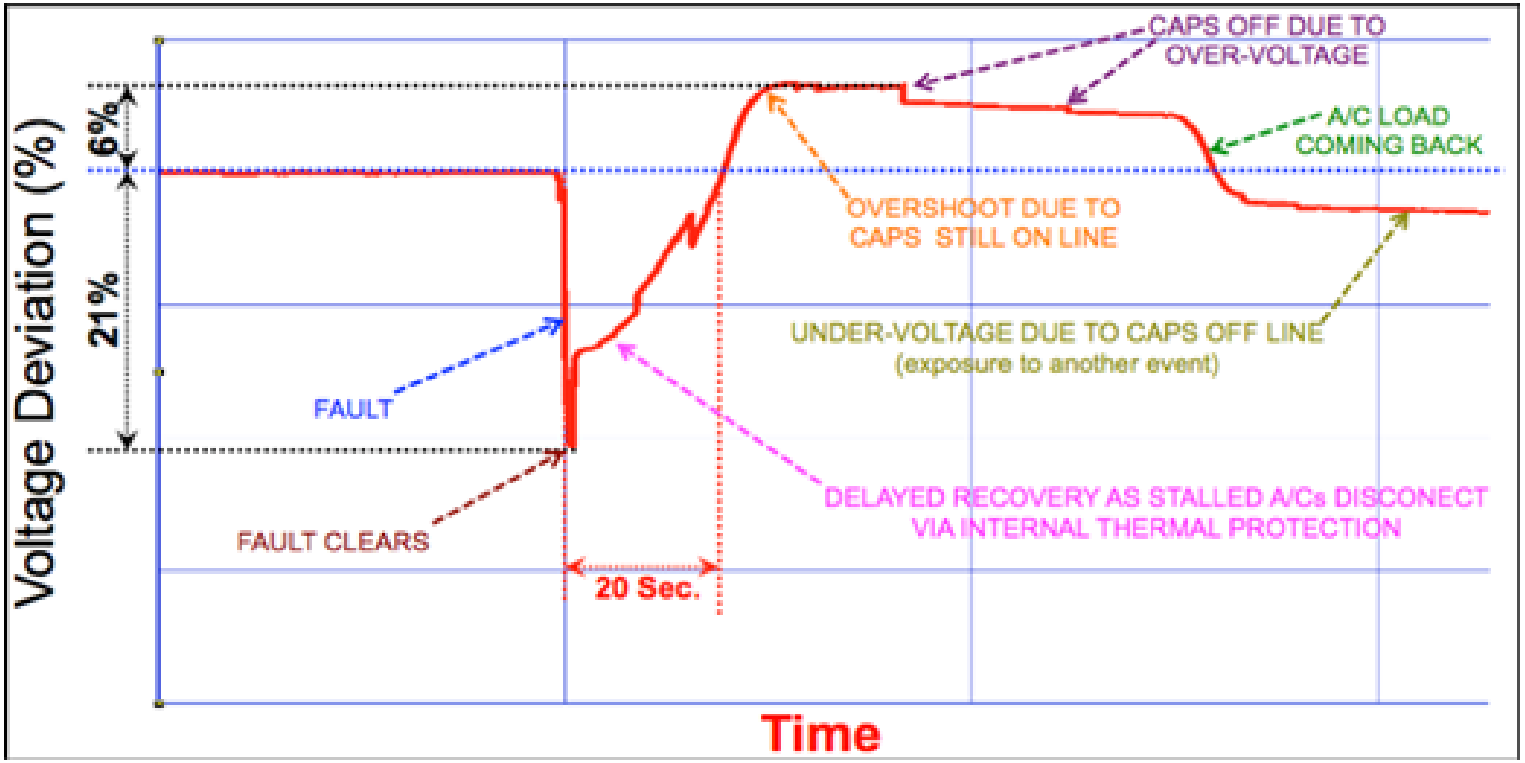

- Studies using traditional models have not been able to accurately reproduce FIDVR events
- FIDVR analysis requires simulation models that represent a wide variety of load dynamics

Figure From: 2013 FIDVR Events Analysis on Valley Distribution Circuits. Richard Bravo and Steven Robles. December 30, 2013. (Available at https://certs.lbl.gov/sites/default/files/2013-fidvr-valley-distribution-circuits-events-analysis.pdf).

Transient Voltage Response Criteria

Load lost due to disturbances can be divided into two categories:

- Consequential load loss - Load disconnected as a result of transmission being removed to isolate the fault or lost due to the voltage dip caused by the fault

- Non-consequential load loss - Loss of additional load due to FIDVR

The objectives of a dynamic voltage criteria are to ensure the fault ride-through by the generators and the majority of the loads, and to minimize the risk of additional motor stalling, generator tripping or voltage collapse.

Transient Voltage Response Criteria

A typical example of a short term dynamic voltage criteria:

- For category P1 and P2 (single contingencies), voltages should recover to above 80% of nominal within 2 seconds of the initial fault
- For categories P3 to P7 (multiple element contingencies), voltages should recover to above 80% of nominal within 4 seconds of the initial fault (some loss of load acceptable)

For long term dynamic voltage criteria, a common practice is:

- Voltages should return to at least 90% of nominal in 10 seconds

Voltage Criteria

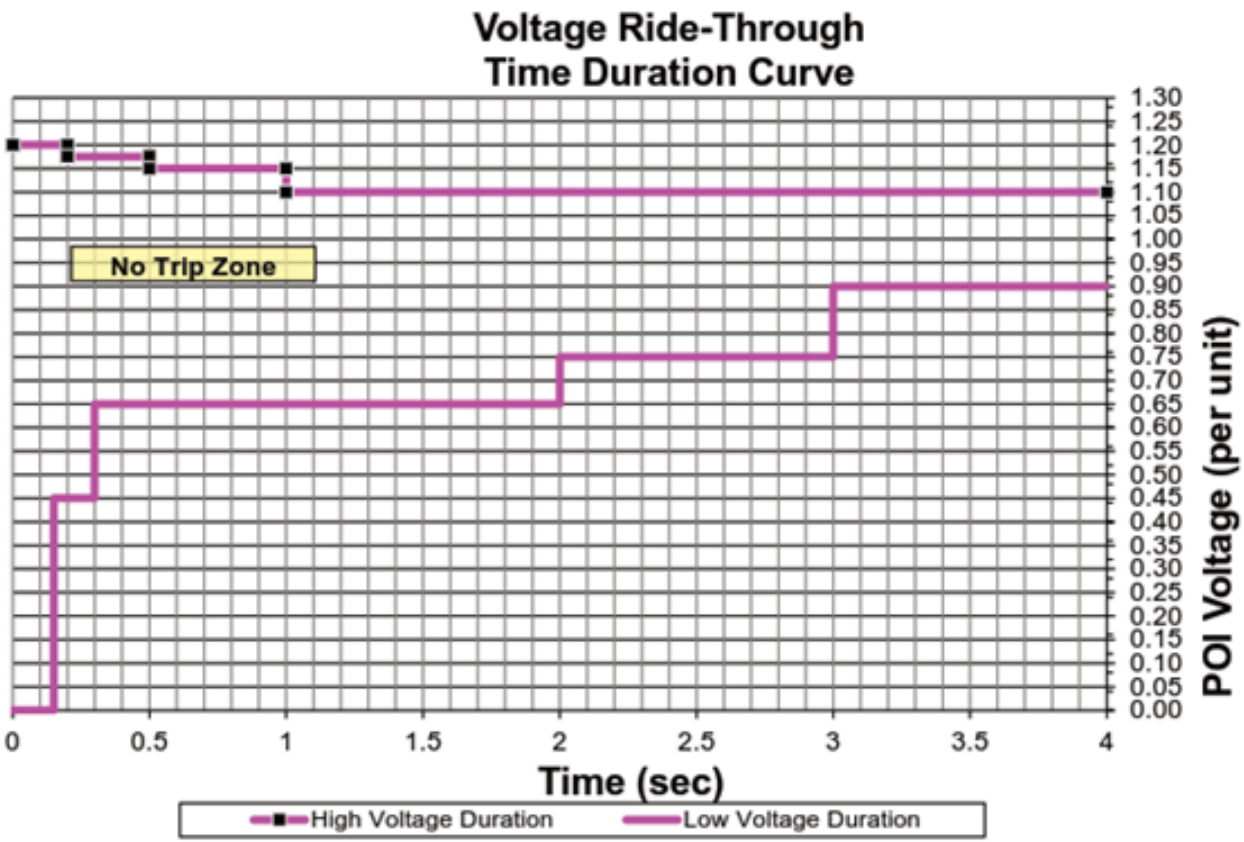

The utilities' and ISO's criteria should be consistent with PRC-024 to ensure generating units remain connected during voltage excursions

Historical Load Models

Since loads are the driving force in the dynamic response of power grids to FIDVR events, the load models need to include representation of:

- Sensitivity to voltage and frequency variations
- Inertial and machine flux dynamics of induction motor loads
- Dynamic response of motor protection systems (thermal and undervoltage)

The magnitude, composition and dynamics of loads change with season, month, week, day and hour of the day

This seasonal and random nature of the loads makes its modeling difficult in power system studies

Historical Load Models – Static Models

- Algebraic equations known as ZIP load models
- Do not represent any load dynamics
- Typical dynamic simulations uses a combination of :
  - 100% constant I for active power loads
  - 100% constant Z for reactive power load
- ZIP load coefficients are often specified on a control area basis

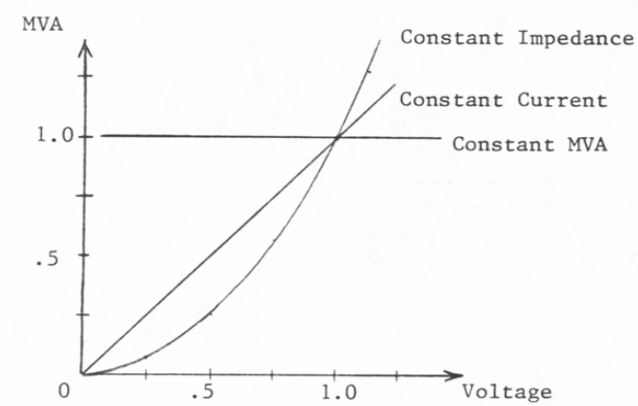

Fig. 1: MVA-Voltage Relationship for Basic Load Categories

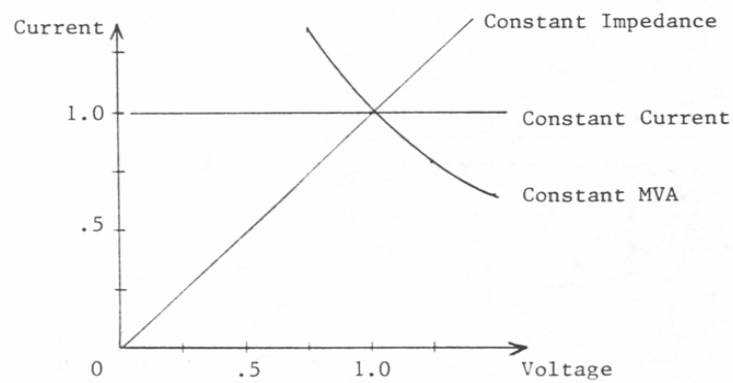

Fig. 2. Current-Voltage Relationship for Basic Load Categories

Historical Load Models - CLOD

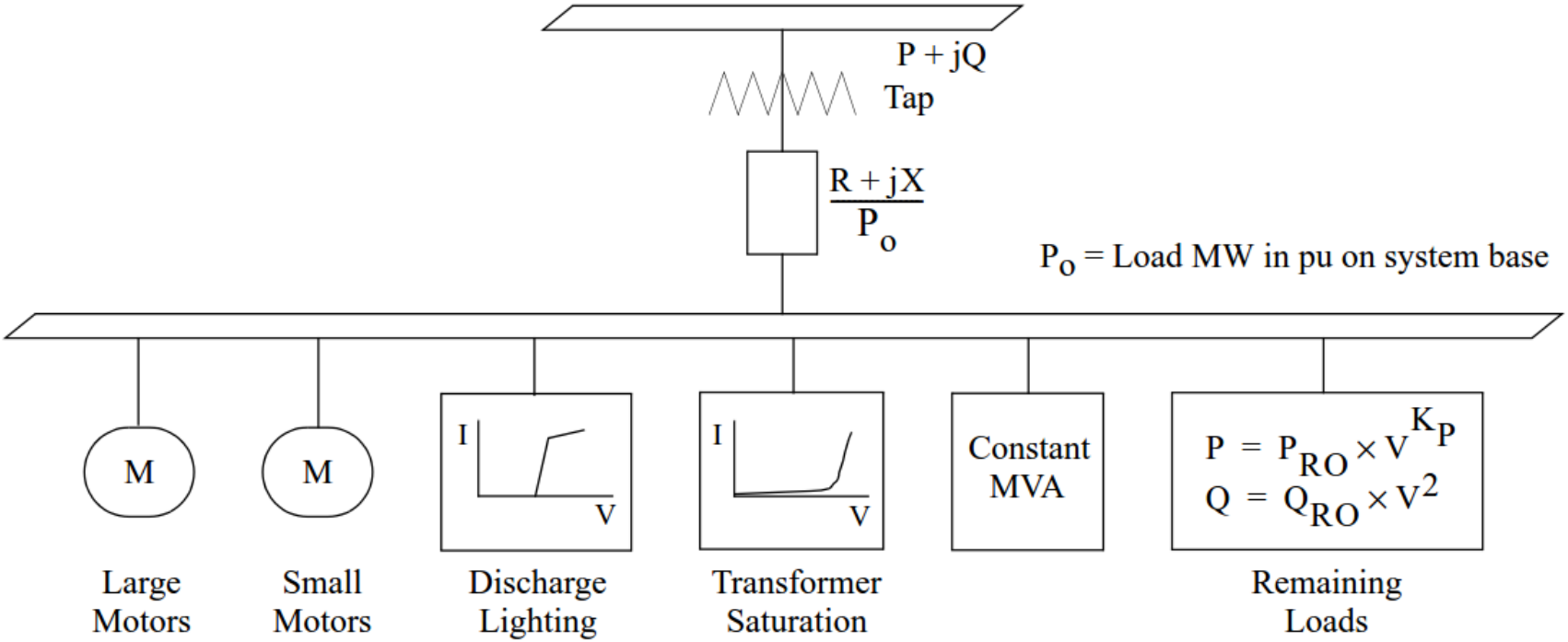

- Developed to simulate some of the dynamic behavior of aggregate loads
- Easy to use in power system studies: inputs are component percentages of the total load at the bus

Historical Load Models - CLOD

- The use of this model is recommended for initial voltage screenings to identify voltage performance issues
- No voltage, frequency or thermal protection
- Not fully represented if the system includes large amounts of residential heating, refrigeration and air conditioning loads
- In this case, a detailed model is required to represent 3-phase induction motors, single phase motor loads and dynamic effects of frequency variation

Load Model - CMLD

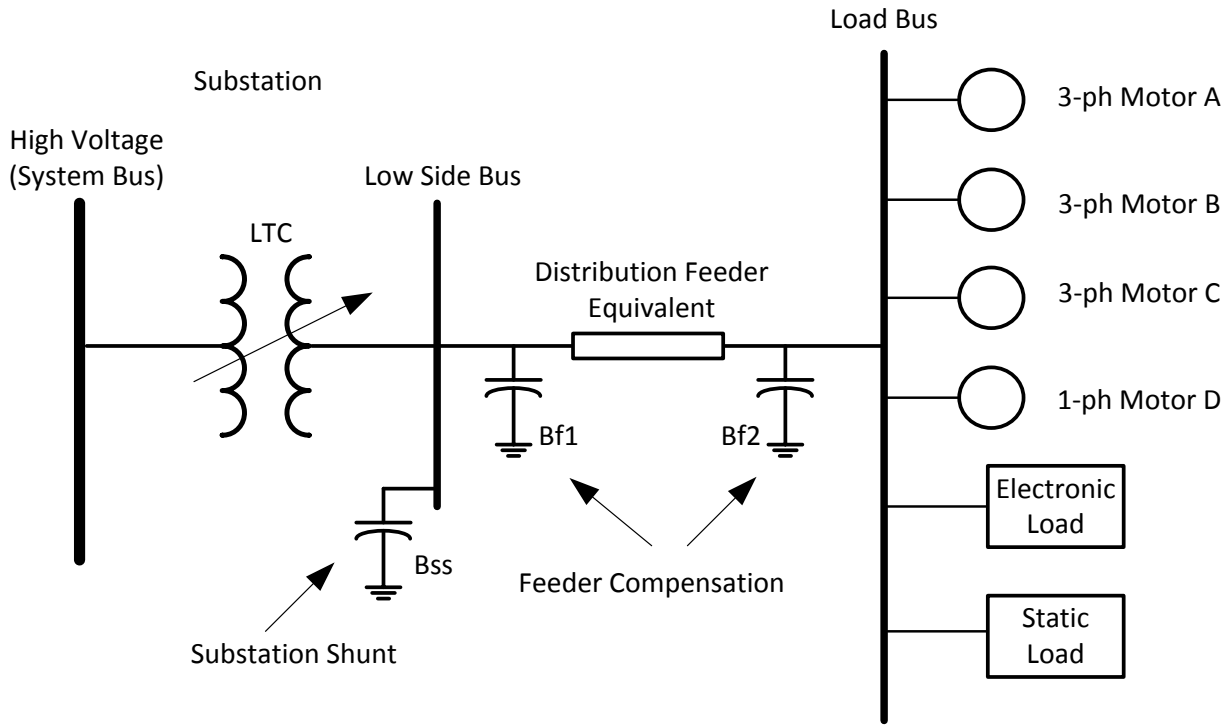

A comprehensive model developed to simulate the dynamic behavior of loads connected to a distribution bus through an equivalent feeder

Load Model - CMLD

- In the Power Flow model, the load is represented at the high voltage bus as a ZIP load (typically constant P and Q)
- During initialization of a dynamic simulation, the model replaces the load with an aggregate model of induction motors, electronic loads, etc.
- The model is responsive to load shedding signals from undervoltage and underfrequency relays applied at the high voltage bus
- Reasonably represents 1-ph induction motor stalling and restart
- Reasonable indication of A/C loads tripping by thermal protection
- Data requirement is significant – 133 parameters

Load Model - CMLD

1-ph induction motors stall and thermal relay characteristics

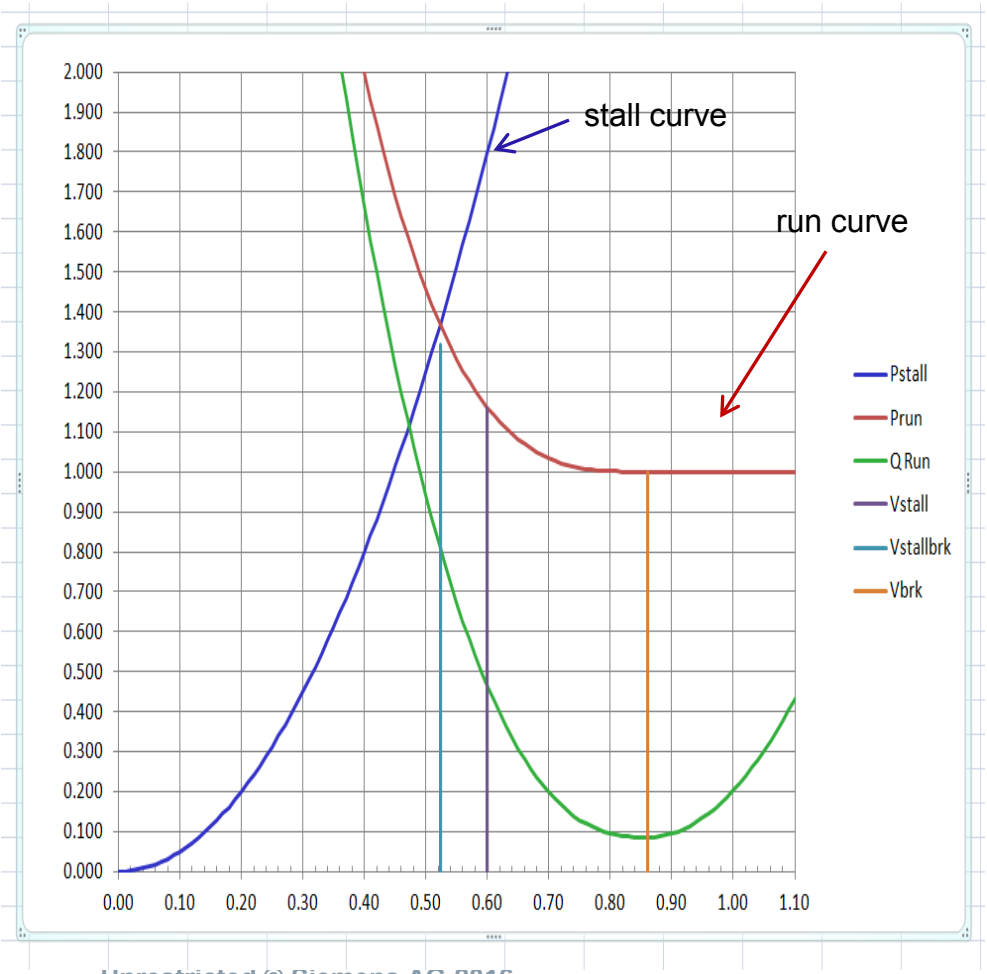

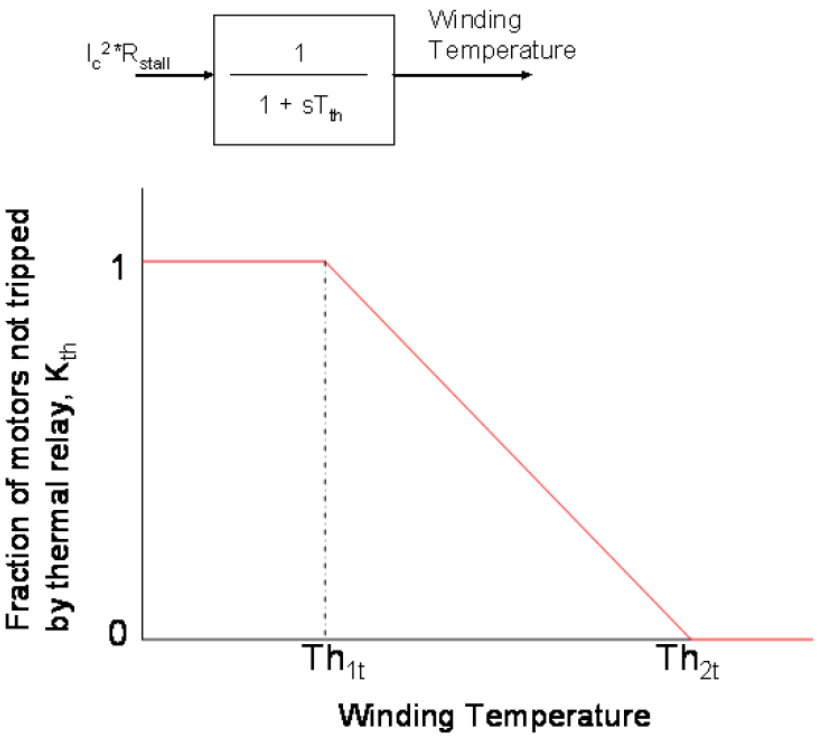

Case Study

The study area includes:

- Voltage levels range: 115, 138, 161 and 345 kV
- On-line generation: 4200 MW
- Total load: 4331 MW

Load consisted of: 3-ph and 1-ph induction motors, heating, electronic devices, etc.

Zones	A (%)	B (%)	C (%)	D (%)	E (%)	F (%)
Industrial	11	0	46	19	21	40
Commercial	51	67	28	17	44	25
Residential	38	33	26	64	35	35
Agriculture	0	0	0	0	0	0

Load Type	A (%)	B (%)	C (%)	D (%)	E (%)	F (%)
Motor A	11	11	11	10	11	11
Motor B	10	9	15	10	11	14
Motor C	5	3	9	5	6	8
Motor D	26	28	16	26	23	18
Electronic Load	18	17	21	18	19	21
Static	31	32	28	31	30	28

Other Key CMLD Parameters

CONs	Oringinal No Trip Values	NERC Values	Values Used in Case Study	EPRI Trip Settings	WECC Trip Settings	Description
J+47	0.6	0.7	0.65	0.65	0.6	Vtr1A - U/V Trip1 V (pu)
J+48	999	0.02	0.1	0.1	0.033	Ttr1A - U/V Trip1 Time (sec)
J+49	0.2	0.2	0.2	0.2	0.3	Ftr1A - U/V Trip1 fraction
J+50	999	1	0.1	0.1	1	Vrc1A - U/V Trip1 reclose V (pu)
J+51	999	999	999	9999	9999	Trc1A - U/V Trip1 reclose Time (sec)
J+52	0.4	0.5	0.5	0.5	0.5	Vtr2A - U/V Trip2 V (pu)
J+53	999	0.02	0.02	0.02	0.033	Ttr2A - U/V Trip2 Time (sec)
J+54	0.15	0.7	0.75	0.75	0.7	Ftr2A - U/V Trip2 fraction
J+55	999	0.7	0.65	0.65	0.65	Vrc2A - U/V Trip2 reclose V (pu)
J+56	999	0.1	0.1	0.2	0.2	Trc2A - U/V Trip2 reclose Time (sec)

Case Study

The transient voltage response criteria used in the case study is:

1. Bus voltages shall not dip below 70% of the nominal voltage for more than 83.3 ms (5 cycles) after fault clearing

2. Bus voltages shall recover to the acceptable steady state low voltage limit within 5 seconds after fault clearing. The steady state low voltage limit is 0.93 pu for all 100 kV and above buses.

Case Study – Comparison of Voltage Response with Different Load Models

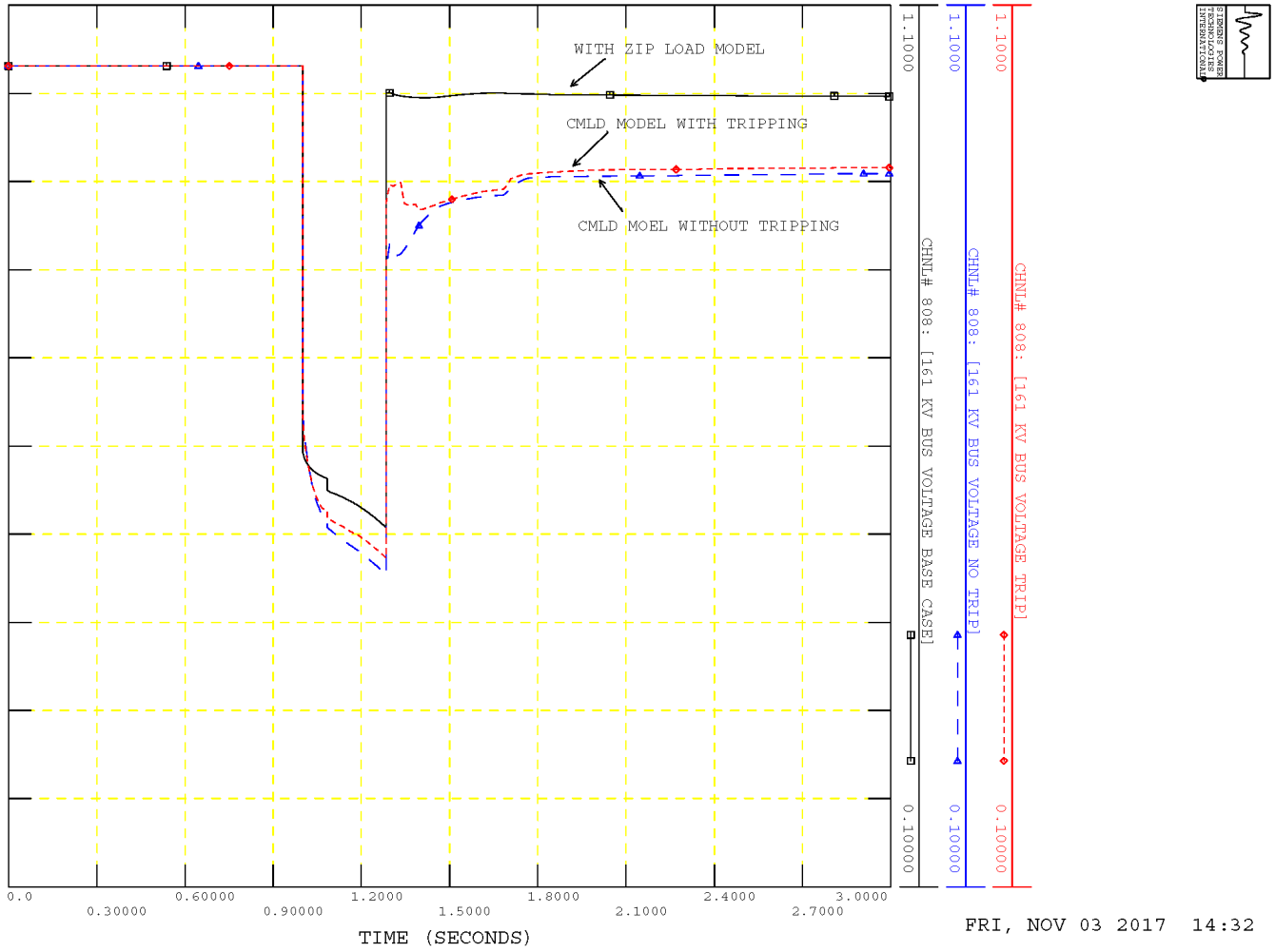

Case Study – Motor A Component P and Q

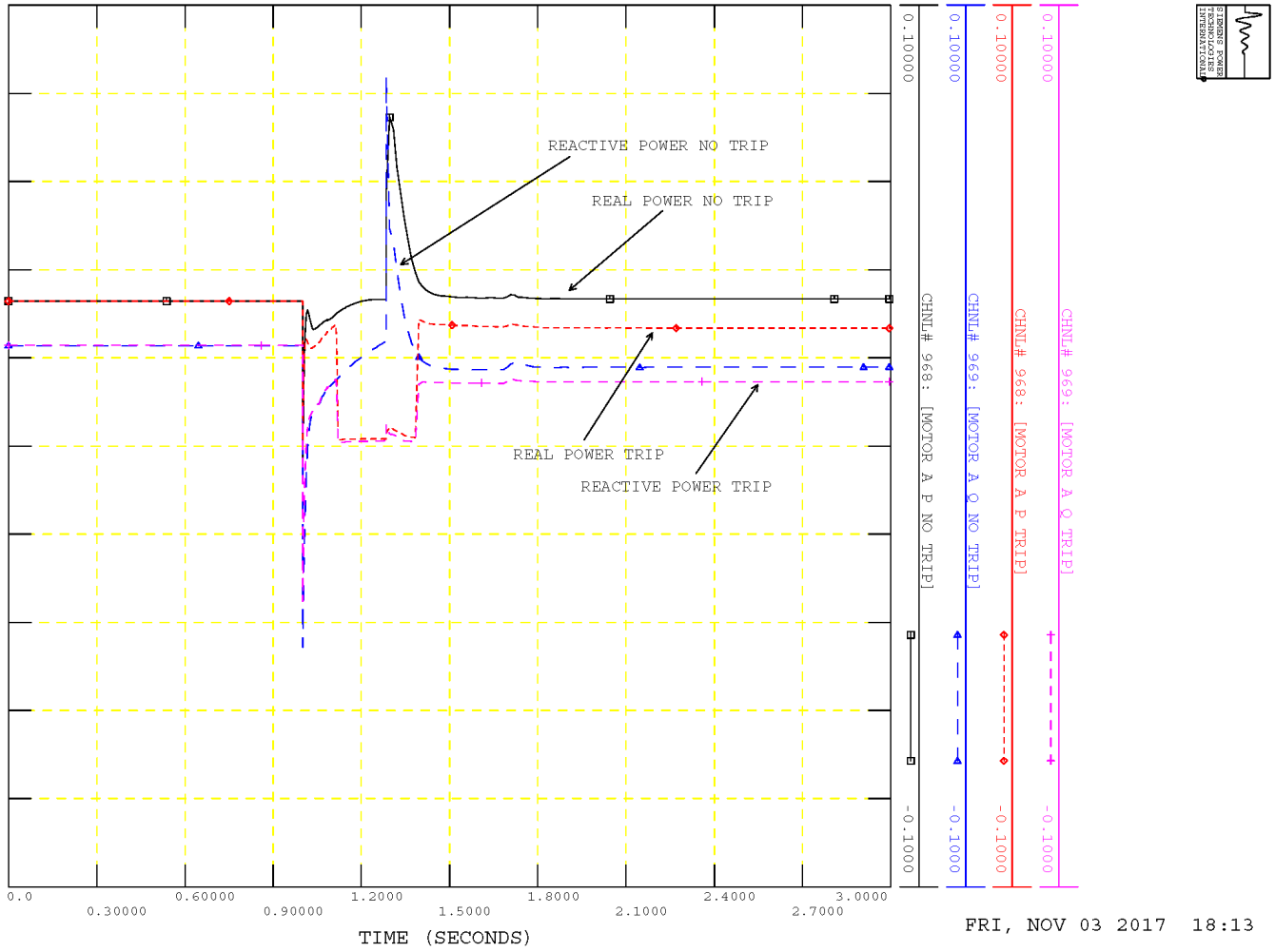

Case Study – Comparison of Voltage Response with Different Load Models (extended time scale)

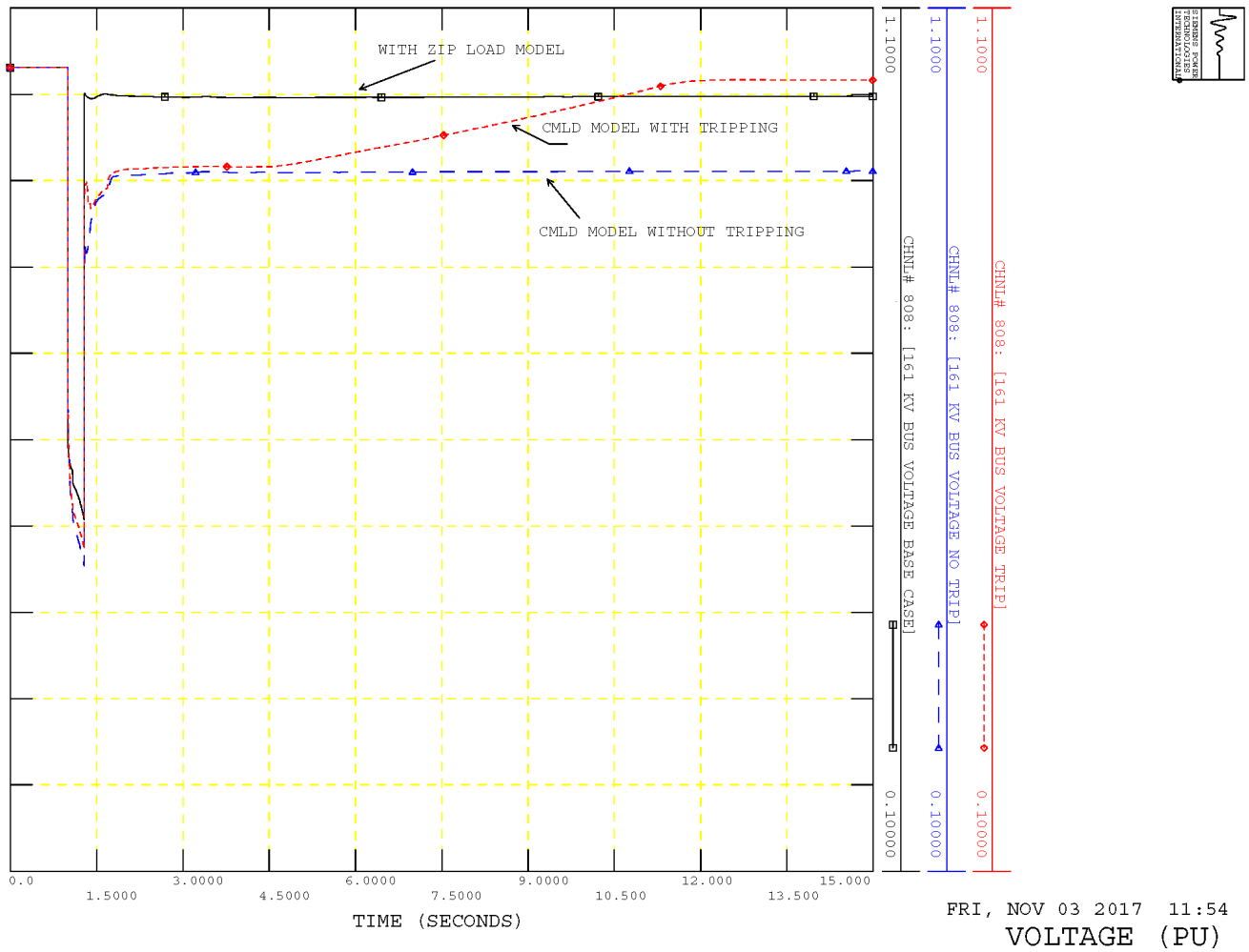

Case Study – Rotor Speed for Motor A, B and C Components

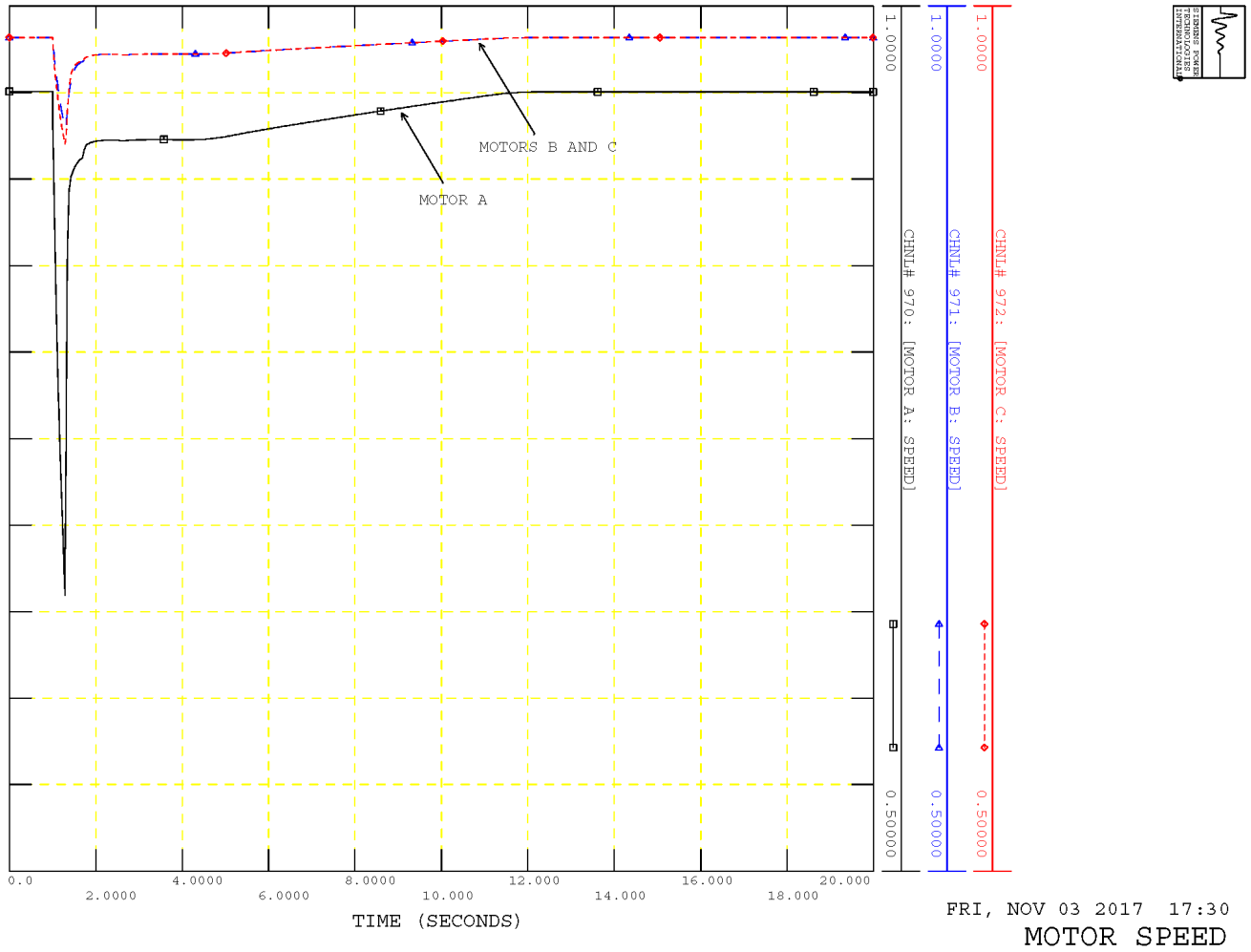

Case Study –Bus Voltage Comparison With and Without Additional Reactive Resources and Transmission Upgrade

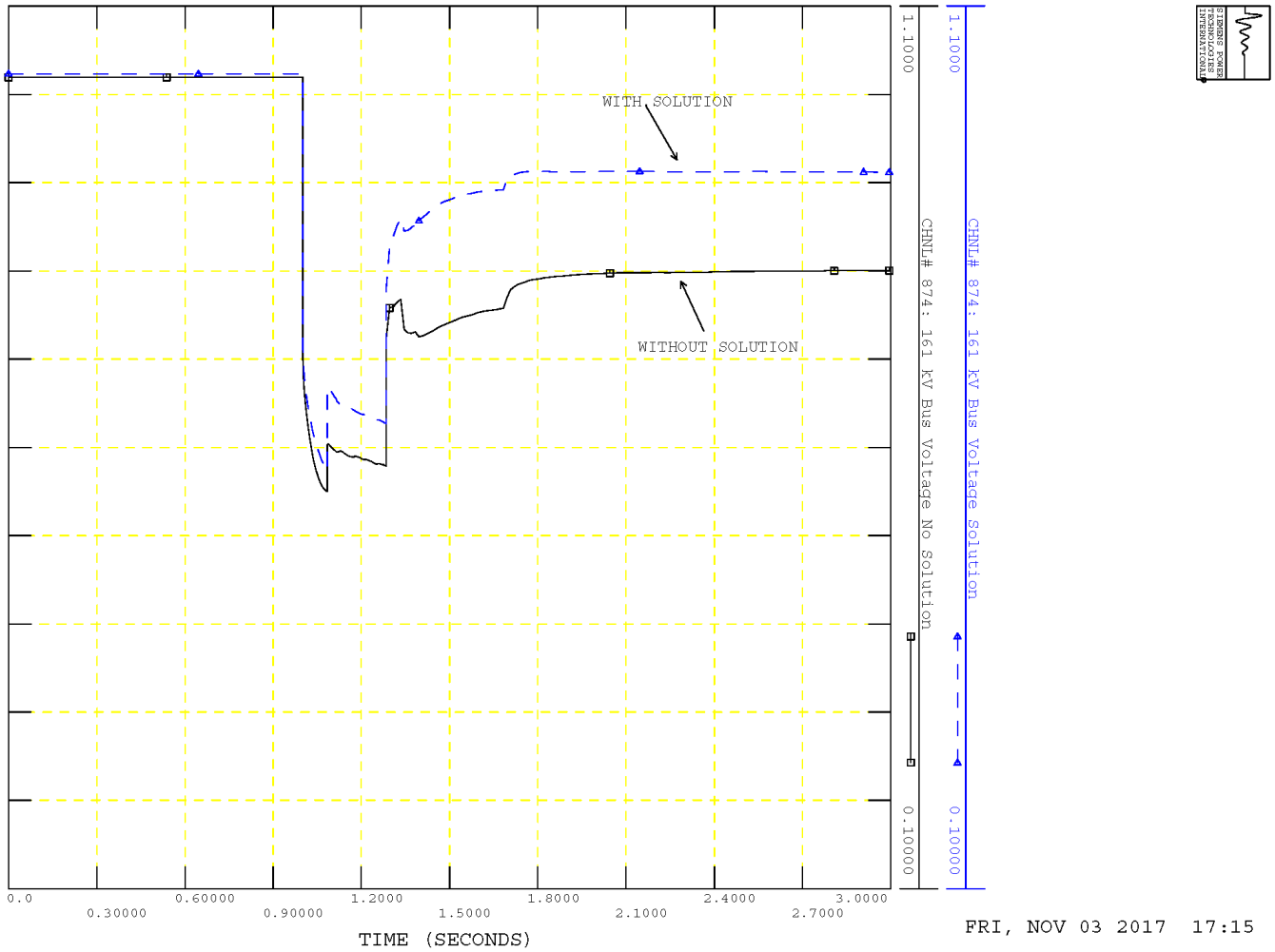

Case Study –Bus Voltage Comparison With and Without Additional Reactive Resources and Transmission Upgrade

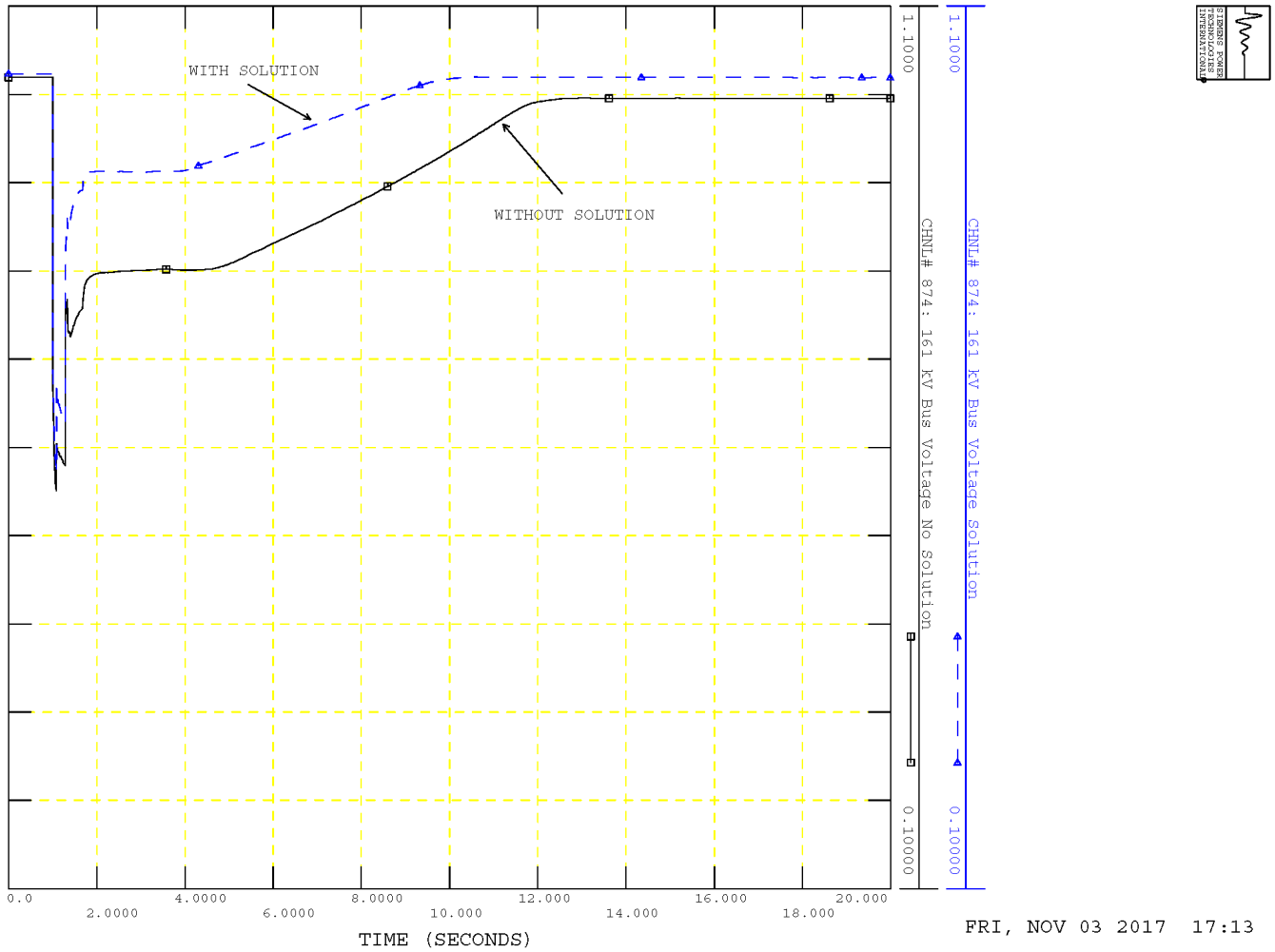

Next Generation of Load Models

- Adaptation of the CMLD to incorporate DER. Work in progress
- The “DER_A” model: represents U-DER and R-DER by a simplified version of generic PV models with a reduced set of parameters

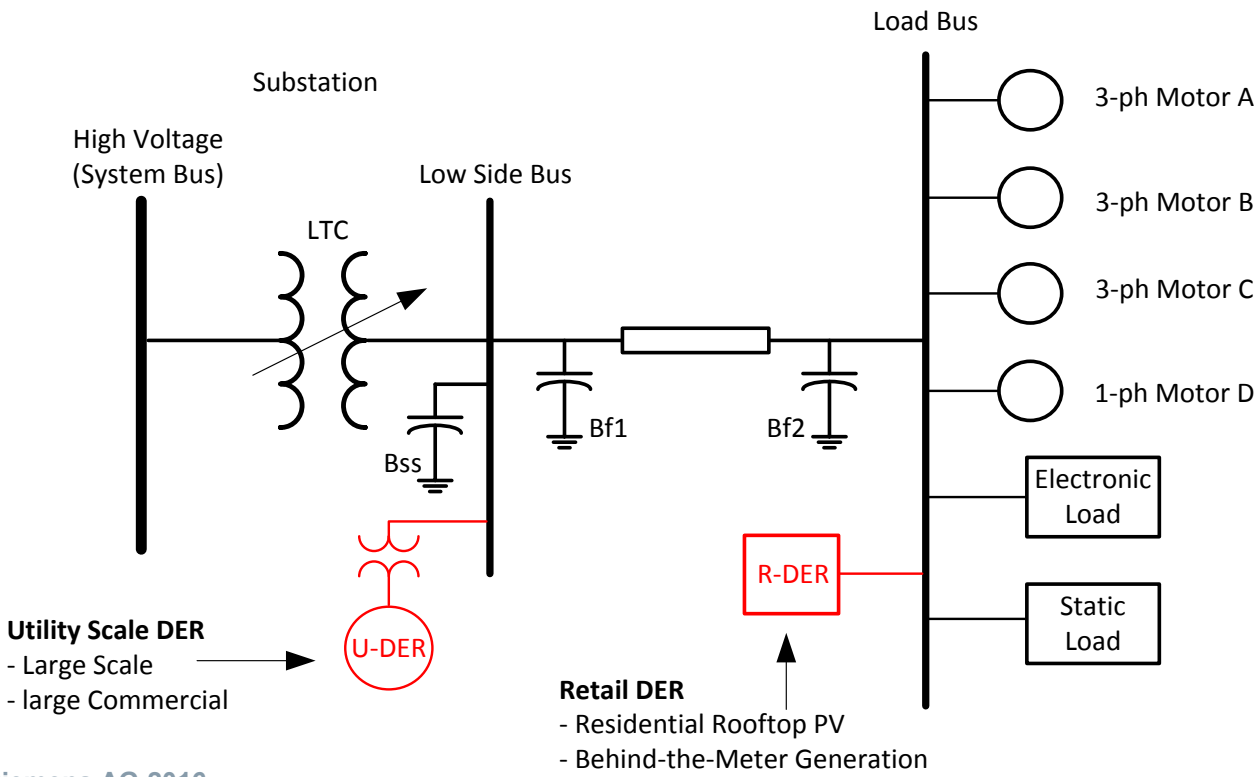

Conclusions

- This presentation aids system planners in making decisions on when simplified or detail load representations are required in stability studies
- Insufficiently detailed load models can result in studies that do not adequately identify potential FIDVR events
- The current CMLD model represents a wide variety of load dynamics, but requires a large amount of data. There is a trade-off between the effort of collecting data and the need for detailed load models
- Comparisons between simulation results and recorded system events are strongly recommended to calibrate the detailed load models. Even then, the seasonal and randomness of loads must be accounted for.

For further questions, comments and inquires

Siemens Power Technologies International

400 State Street, Schenectady
NY 12305

Daniel Feltes
Phone: +1(518) 395-5170

E-mail: daniel.feltes@siemens.com