Local Balancing Authority Metering in MISO:
An Engineering Perspective

Brianna Swenson – Alliant Energy

Minnesota Power Systems Conference

November 8, 2017

Alliant Energy

Topics

- Brief history of interties and regulations
- Who is involved?
- What exactly are we doing?
- Why is it important?
- Project considerations

Definitions

- ACE – Area Control Error
- AGC – Automatic Generator Control
- ICCP – Inter-Control Center Communications Protocol
- ISO – Independent System Operator
- LBA – Local Balancing Authority
- MISO – Midcontinent Independent System Operator
- RTO – Regional Transmission Operator

Midwest Utility History

- **1880s – 1920s**
  - Cities powered by multiple generating companies
  - Mergers and acquisitions consolidate companies
  - Railways, street cars, manufacturers spread electric use

- **1920**
  - Federal Water Power Act creates Federal Power Commission (FPC)

Midwest Utility History continued…

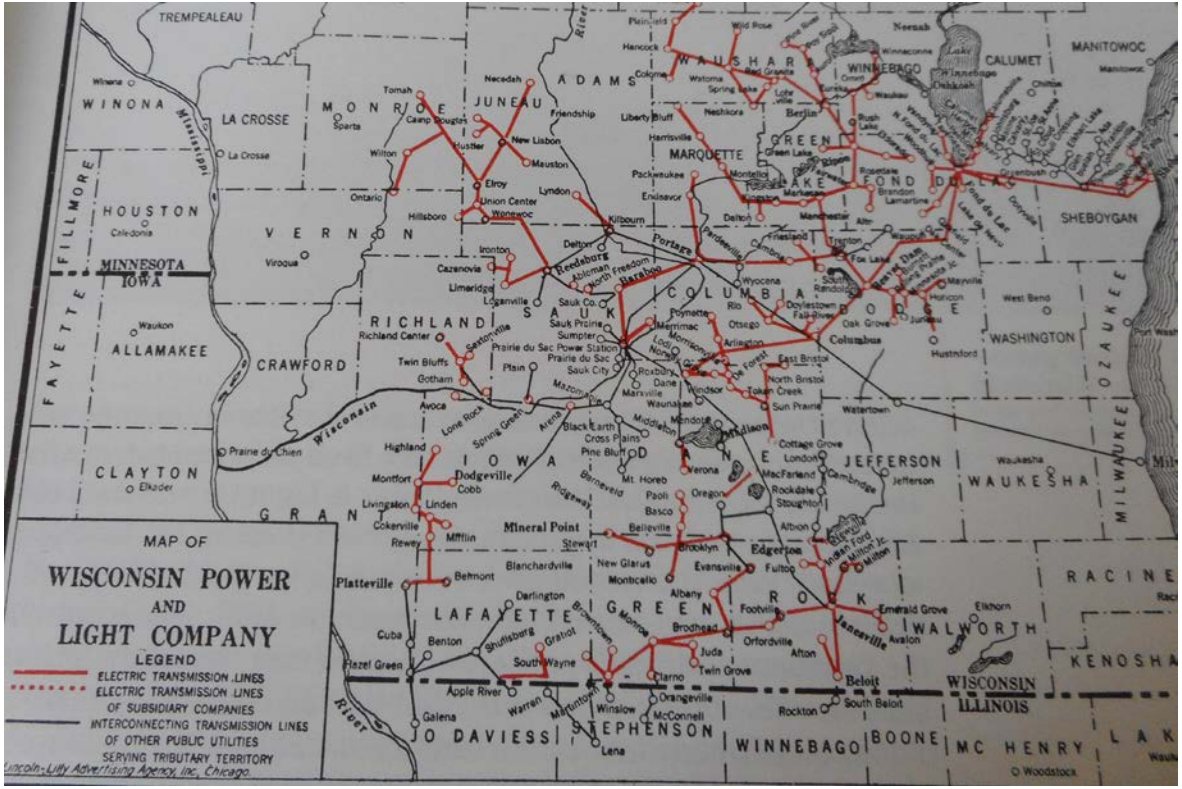

Photo courtesy of "Transforming the Heartland: The History of Wisconsin Power and Light Company" by Bill Beck

- **1920s – 1930s**
  - First interconnection agreements between neighboring utilities
  - Trade excess generating capacity

Midwest Utility History continued…

- **1935**
  - Federal Power Act (FPA) authorized FPC to regulate electric transmission in interstate commerce

- **1936**
  - Congress passes Rural Electrification Act
  - Encouraged rural electrification by IOUs and PPUs
  - Gave preference and funding to rural electric coops

Midwest Utility History continued…

- **1978**
  - Public Utilities Regulatory Policies Act (PURPA)
  - Required utilities to purchase power from non-utility generators at utility's avoided cost
- **1992**
  - Energy Policy Act of 1992
  - Transmission access for wholesale buyers in procuring wholesale electric supplies

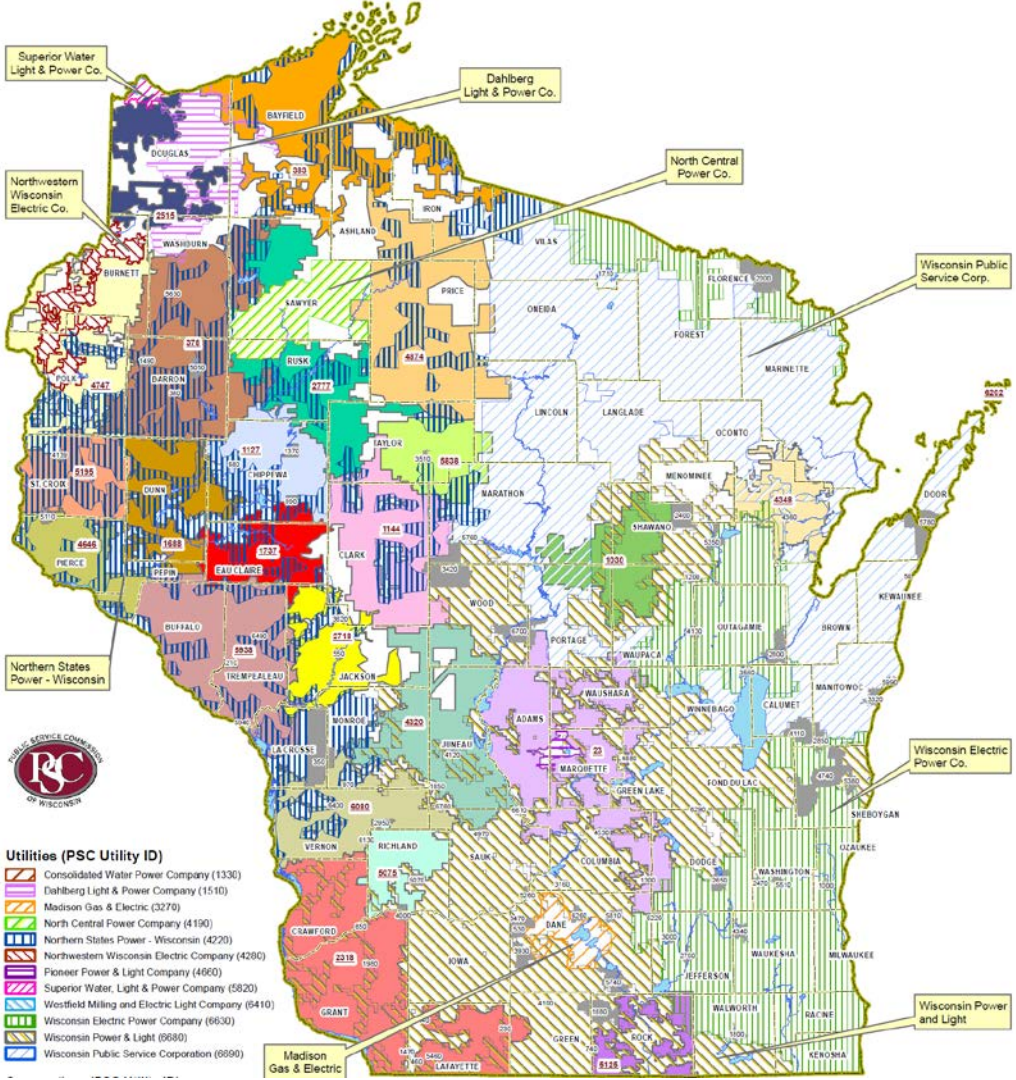

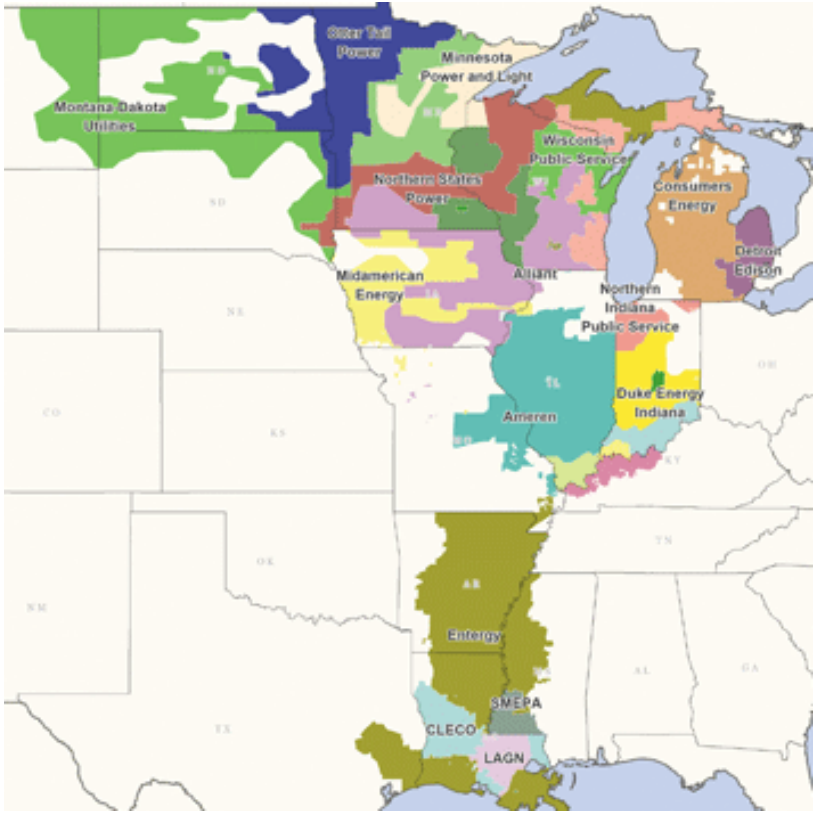

Alliant Energy

Control Area Responsibilities

Pre-MISO – "Control Areas"

- Companies independently monitored and controlled own generation, transmission, and load
  - Load balancing
  - Spinning reserves
  - Dynamic reserves
  - Net interchanges
  - Frequency bias
  - Emergency measures (load shedding)
  - Other ancillary services

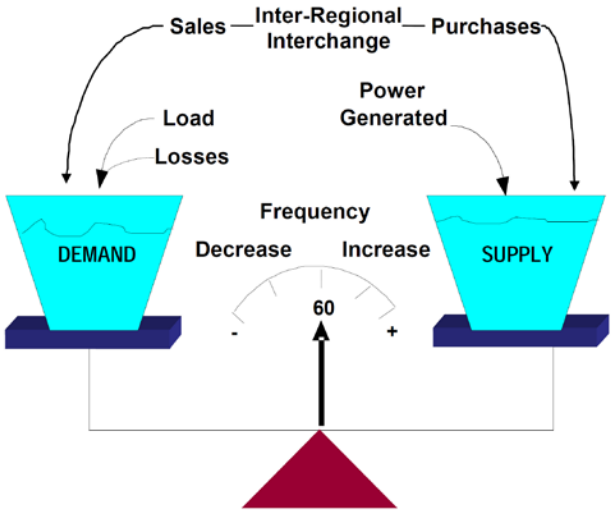

What is a Balancing Authority?

- Balancing Authority (BA) – entity responsible for integrating resource plans ahead of time, maintaining load-interchange-generation balance within a Balancing Authority Area, and supports Interconnection frequency real-time

- Balancing Authority Area (BAA) – collection of generation, transmission, and loads within the metered boundaries of the BA. The BA maintains load-resource balance within this area.

NERC Balancing Authorities

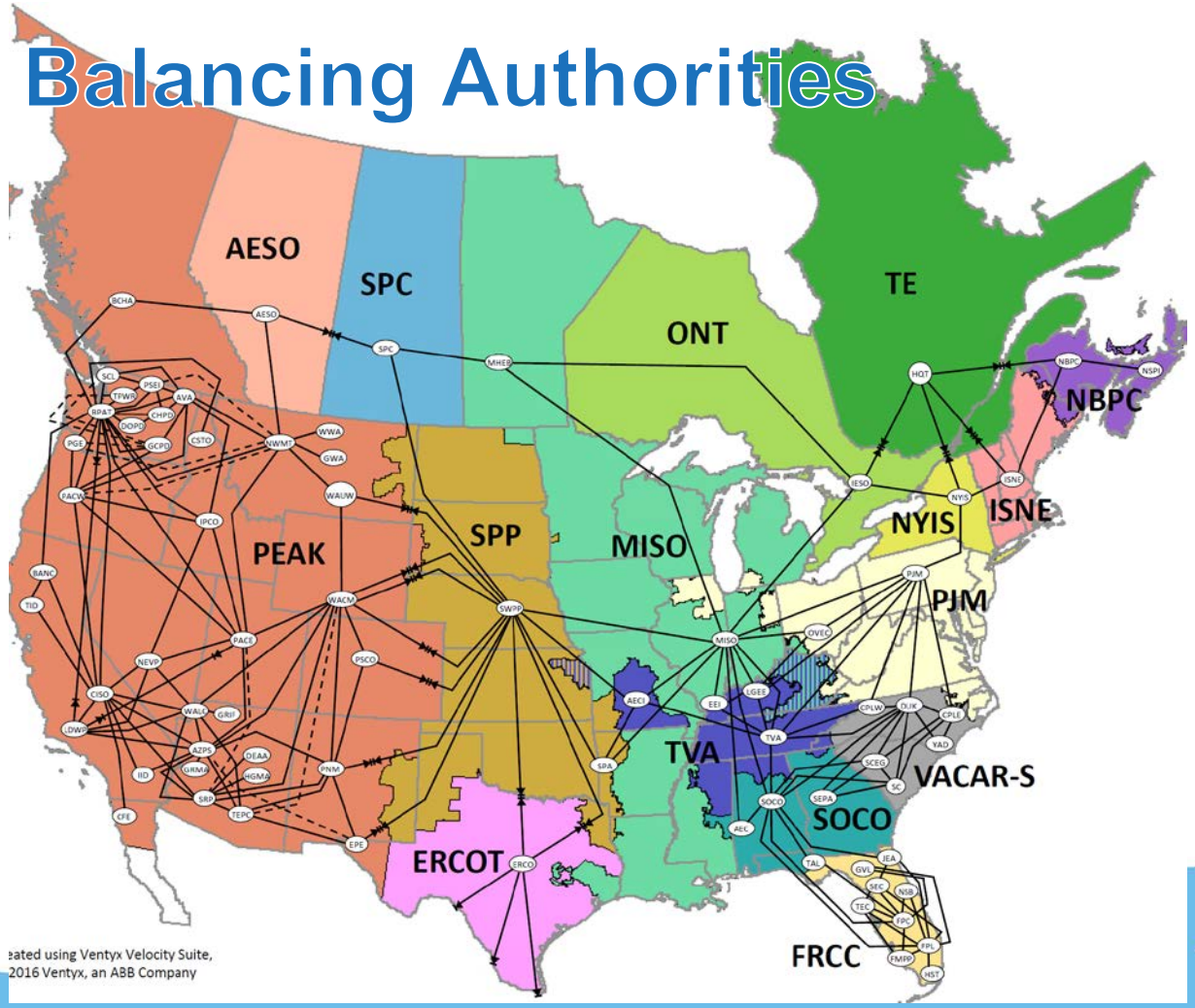

Why LBA Metering is Important

- MISO AGC requires accurate ACE calculation, which relies on each LBA sending ICCP measurements of all tie lines

- NERC Reliability Standards require each BA to include all tie line flows with Adjacent BAs in their ACE calculation
  - MISO responsible for real-time monitoring of tie line flows as BA and Reliability Coordinator

Why LBA Metering is Important

- Close coordination will ensure compliance with all applicable regulatory and non-regulatory obligations for both MISO and LBAs

- Each LBA can use LBA meters to monitor system load, monitor system generation, monitor MISO loads, and settle with MISO

Net Generation – Net Ties ± MISO Loads = SYSTEM LOAD

External ties to non-MISO BAs: MISO LBA responsibilities

- Ensure that adequate metering, communications, and related equipment is maintained and employed to obtain Actual Interchange data

- Collect, calculate, verify, and provide to MISO Actual Interchange values for each tie line

External ties to non-MISO BAs: MISO LBA responsibilities continued…

- Telemeter and report tie line MWh data to MISO at end of each hour

- Gather after-the-fact tie line accounting data with External BAs and provide to MISO

External ties to non-MISO BAs: MISO LBA responsibilities continued…

- Inform MISO of any tie line modeling changes at least 6 months prior to implementation
- Inform MISO of any data point changes for tie lines at least 1 month prior to implementation
- Inform MISO prior to and when bringing new tie lines into service

External ties to non-MISO BAs: MISO LBA responsibilities continued…

- Coordinate modeling of tie lines with MISO
  - **Verify tie-line configuration, analog quantities, and direction (+/- MW) with LBA, MISO, and Transmission Owner prior to placing in service**
  - **Re-verify these values prior to placing into service**

LBA Actions

- LBA receives SCADA from meter every 4 seconds
  - Calculates analog average, sums up hourly value

- LBA receives MV-90 data every hour
  - MV-90 scans MWh values every 15 minutes, stores value

LBA Actions continued…

- LBA compares hourly value to pulse accumulator value from MV-90
  - This value goes into load calculation
  - This value becomes part of Net Interchange value that is compared with neighboring LBAs/BAs
  - **LBA has to ‘agree’ with neighbors on Net Interchange values every hour, per hour, down to single MW value (±1MW)**

LBA Actions continued…

- At end of month, compares MV-90 data accumulations to calculated SCADA data
  - Compares data to all counterparties (for each BA/LBA intertie point)
  - Sends info to MISO
- LBAs have 105 days to make changes to any daily data/reports and settle with counterparties
  - Settlements occur using statements 7, 14, 55, and 105 days
- **All data ultimately wrapped up into LBA payment to MISO for load**

MISO BA versus MISO LBA

- **MISO BA**
  - Calculate ACE for MISO BA
  - Maintain ability to run AGC
  - Comply with NERC Control Performance and Disturbance Control Standards
  - Repay Inadvertent Interchange Balance with BA counterparties
- **MISO LBA**
  - Monitor the LBA system in real-time
  - Send the Net Actual Interchange (NI_A) by ICCP to MISO BA
  - Send individual tie flows to MISO BA
  - Forward dispatch signals from MISO BA to generations plants in area (where applicable)

LBA Project Triggers

- Transmission interconnect
- Transmission system reconfiguration
- Distribution interconnect
- BA / LBA boundary reconfiguration

- Generation interconnect
  - Often involves multiple counterparties

LBA Intertie Project Checklist

- ❑ Review transmission network configuration
  - ❑ New boundary demarcation
    - ❑ New transmission line, transmission network reconfiguration, new generation source, new pseudo-tie, new customer, etc.
  - ❑ Relocated boundary demarcation
    - ❑ Move intertie point breaker / line within same substation
    - ❑ Move intertie point breaker / line to different substation
  - ❑ Replacement / upgrade / relocation / ownership transfer of existing equipment

- ❑ Counterparties agree on interconnection location(s)
  - ❑ Where will meters physically connect to system?
  - ❑ Who will own the meters?

LBA Intertie Project Checklist continued…

- Counterparties agree on instrument transformers
  - Metering CTs and VTs
    - Should be “revenue quality”
  - Physical locations, ratings, specifications, connections, owner

LBA Intertie Project Checklist continued…

- Counterparties agree on meter(s)
  - Revenue quality meter (RQM) make, model
  - Physical location(s) - indoor panel / indoor enclosure / outdoor enclosure
  - Physical location of panel / enclosure within substation / building

LBA Intertie Project Checklist continued…

- ❑ Counterparties agree on RTU(s)
  - ❑ Physical location – indoor panel / indoor enclosure (wall-mount) / outdoor enclosure
  - ❑ How will each company connect from RTU to meter(s)?
    - ❑ Serial DNP
    - ❑ KYZ pulses
    - ❑ Transducers
    - ❑ Receive meter data via ICCP from meter owner
    - ❑ Other?
  - ❑ Which port(s) are designated / programmed for which company?
  - ❑ Should you allow an RTU-RTU connection?

LBA Intertie Project Checklist continued…

- ❑ Counterparties agree on communication needs
  - ❑ Data path for each company
    - ❑ Each company has individual RTU connection(s) to meter
    - ❑ ICCP between counterparties (prefer to avoid)
    - ❑ RTU-to-RTU connections (prefer to avoid)
  - ❑ Communication path for each company
    - ❑ Physical T1 from telecommunications company
    - ❑ Microwave T1
    - ❑ IP modem (prefer only for temporary data transfer)

LBA Intertie Project Checklist continued…

- ❑ Counterparties agree on data required by each party
  - ❑ MW (instantaneous, directional)
  - ❑ MVAR (instantaneous, directional)
  - ❑ Bus kV (instantaneous)
  - ❑ Amps (instantaneous, directional)
  - ❑ MWhIn
  - ❑ MWhOut
  - ❑ Intertie point circuit breaker status

How will you define directional power flow for your LBA?

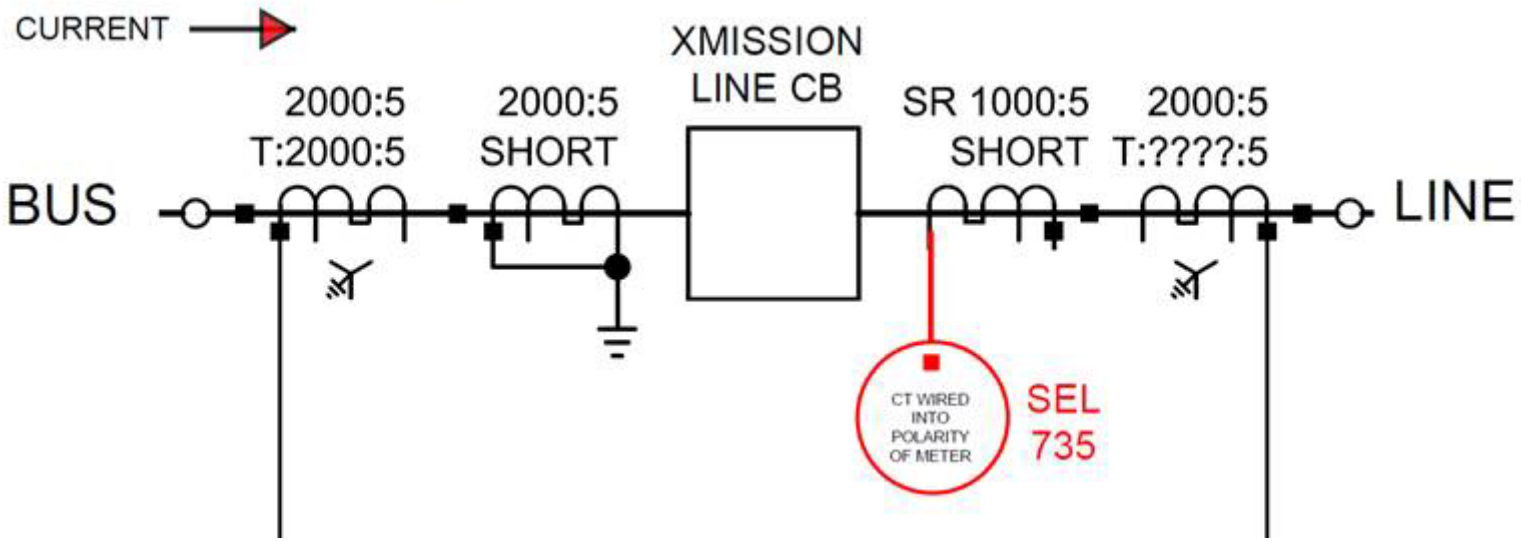

Meter here will measure positive power (current) flow with network flow from bus to line

LBA Intertie Project Checklist continued…

- ❑ Counterparties agree on schedule
  - ❑ Engineering / Construction
  - ❑ Energization

- ❑ Counterparties agree on cost sharing requirements
  - ❑ Generation-interconnection ➡ paid by generator
  - ❑ Transmission-driven new LBA point ➡ paid by transmission company
  - ❑ Other project ➡ LBA responsible for costs

Additional LBA Project Considerations

- Non-standard companies and contacts
  - Companies / contractors with little-to-no previous LBA experience
  - Wind and solar developers
- **COMMUNICATION**
- Ever-changing schedules
- Coordination with internal parties
  - LBA has to check out meter initially with injected values
  - LBA has to check out meter again with actual values after energization and in-service
  - LBA has to verify values with counterparty and MISO

Thank you!

Please submit your abstracts and ideas for MIPSYCON 2018!

www.ccaps.umn.edu/mnpowersystems

Appendix

MISO Fact Sheet

The Midcontinent Independent System Operator, Inc. (MISO) is a not-for-profit, member based organization. We ensure the reliable delivery of electricity, at the lowest cost, across high-voltage power lines in 15 U.S. States and the Canadian province of Manitoba. MISO also conducts transmission planning and manages the buying and selling of wholesale electricity in one of the world's largest energy markets. The company's vision is to be the most reliable, value-creating RTO.

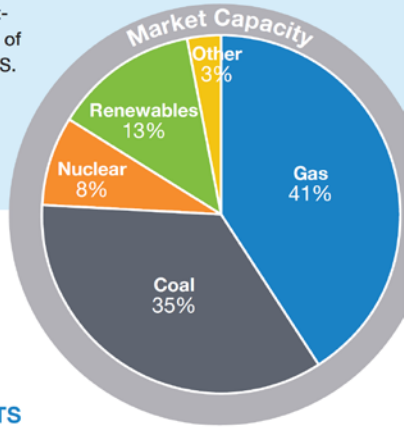

SCOPE OF OPERATIONS

Generation Capacity
- 174,724 MW (market)
- 191,062 MW (reliability)

Historic Summer Peak Load *(set July 20, 2011)*
- 127,125 MW (market)
- 130,917 MW (reliability)

Historic Winter Peak Load *(set January 6, 2014)*
- 109,336 MW (market)
- 117,903 MW (reliability)

Transmission
- 65,800 miles

Balancing Authorities
- 36 Local Balancing Authorities in MISO

Network Model
- 291,538 SCADA data points
- 6,567 generating units

Registered Wind Generation Capacity	16,326 MW
Registered In-Service Wind Generation Capacity	16,173 MW
Registered DIR Capacity	13,838 MW
Registered In-Service DIR Capacity	13,685 MW

MARKETS OVERVIEW

MISO manages one of the world's largest energy and operating reserves markets using security-constrained economic dispatch of generation.
The Energy and Operating Reserves Market includes a Day-Ahead Market, a Real-Time Market, and a Financial Transmission Rights (FTR) market. These markets are operated and settled separately.

- $25.3 billion annual gross market charges (2017)
- 2,434 pricing nodes
- 437 Market Participants who serve ~42 million people

TRANSMISSION EXPANSION PLANNING

- 383 approved new projects in MTEP16, representing $2.7 billion investment and 7,100 miles of new transmission

MEMBERSHIP

- 48 Transmission Owners with $37.9 billion in transmission assets under MISO's functional control
- 127 Non-transmission owners

Alliant Energy

NERC Functional Model Diagram

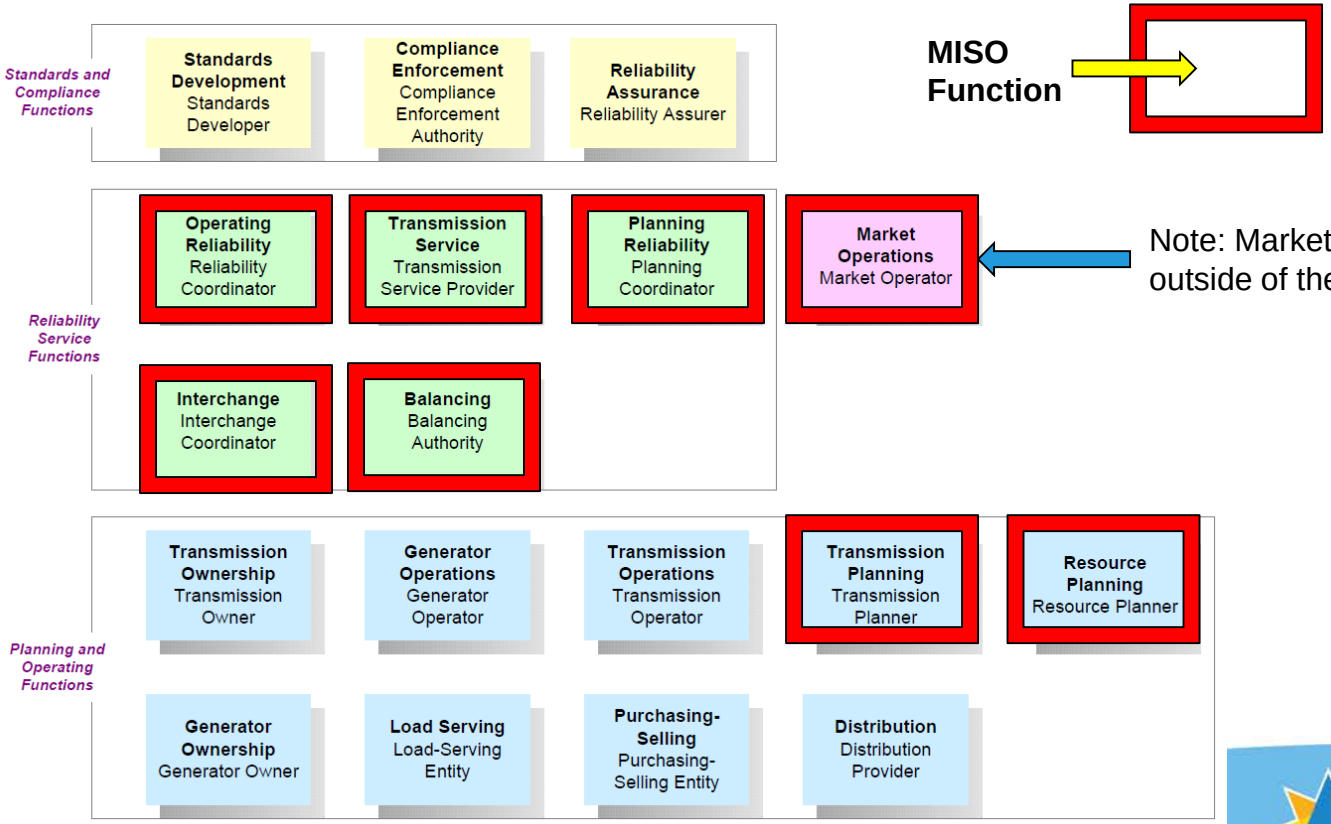

Note: Market Operations is outside of the NERC model

MISO Real-Time Operation Functions

Balancing Authority

- Assumed responsibility from LBAs in 2009 with the incorporation of the Ancillary Service Market (ASM) and Energy Market
- Responsible for the centralized operation of AGC

Reliability Coordinator

- Monitors Bulk Electric System (BES) with tools, processes, and procedures to prevent or mitigate emergency operating situations
- Enable calculations of IROLs, and to operate within such limits

Transmission Service Provider

- Provide open access to the MISO transmission per the OATT
- Manage congestion, monitor flowgates, and operate under abnormal/emergency conditions

Interchange Coordinator

- Receives curtailments and redispatch requests from RCs for Arranged Interchange.
- Receives information on confirmed interchange interruptions from the Bas and communicates the confirmed interchange status/revisions to BAs, TSPs, RCs, and Purchasing-Selling LSEs.

Delineation of MISO and NERC Roles

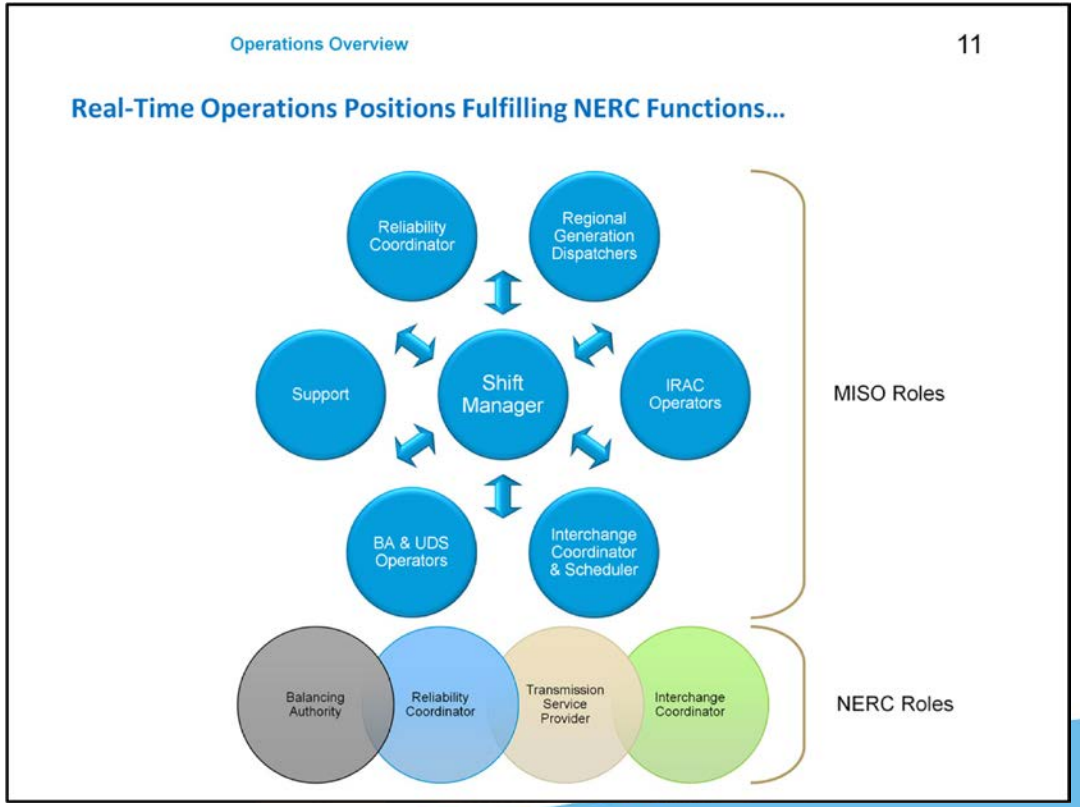

NERC Reliability Coordinators

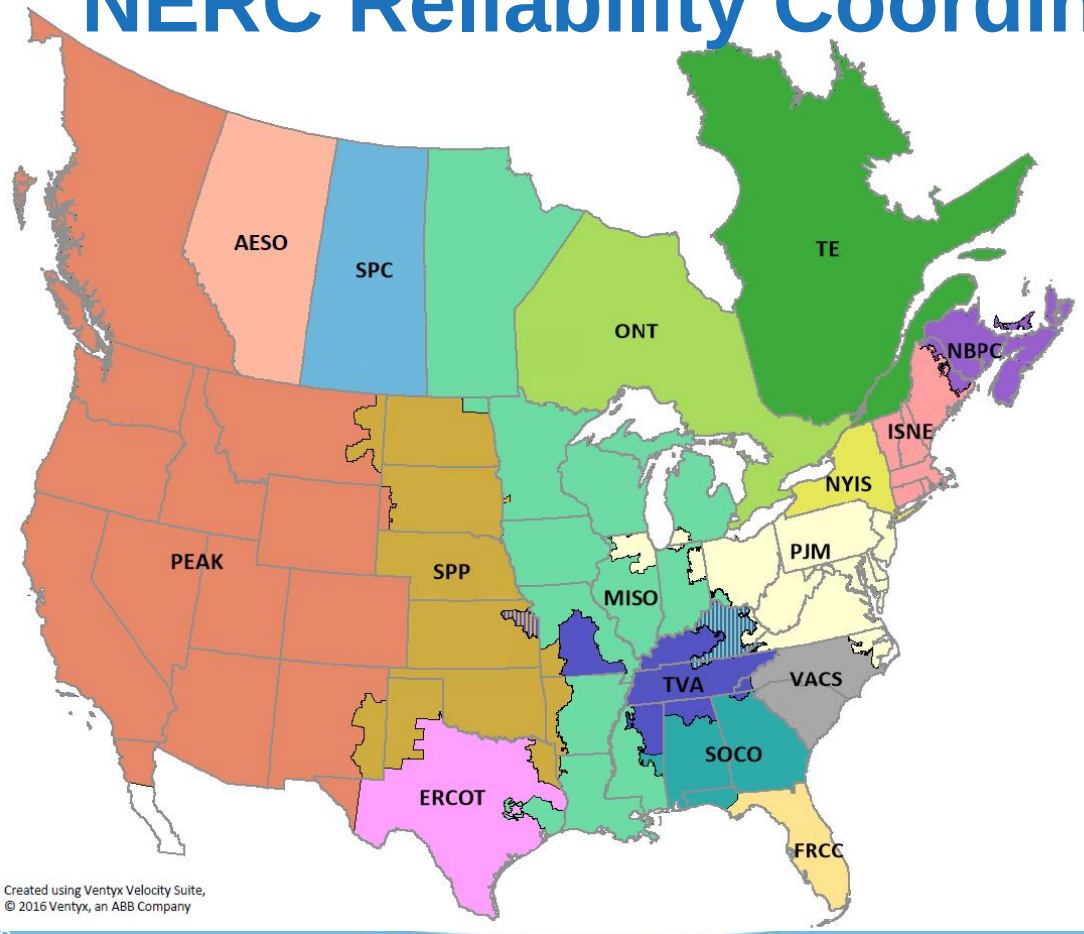

Created using Ventyx Velocity Suite,
© 2016 Ventyx, an ABB Company

NERC Reliability Coordinators

As of June 1, 2015

- Alberta Electric System Operator
- Electric Reliability Council of Texas
- Florida Reliability Coordinating Council
- Hydro Quebec TransEnergie
- ISO New England, Inc.
- Midcontinent ISO
- New Brunswick Power Corporation
- New York Independent System Operator
- Ontario Independent Electricity System Operator
- Peak Reliability
- PJM Interconnection
- Saskatchewan Power Corporation
- Southern Company Services, Inc.
- Southwest Power Pool
- BAs receive RC services from SPP or TVA
- Tennessee Valley Authority
- BAs receive RC services from TVA or MISO
- VACAR South

Midwest Reliability Organization (MRO)

FERC Regional Transmission Organizations (RTOs/ISOs)

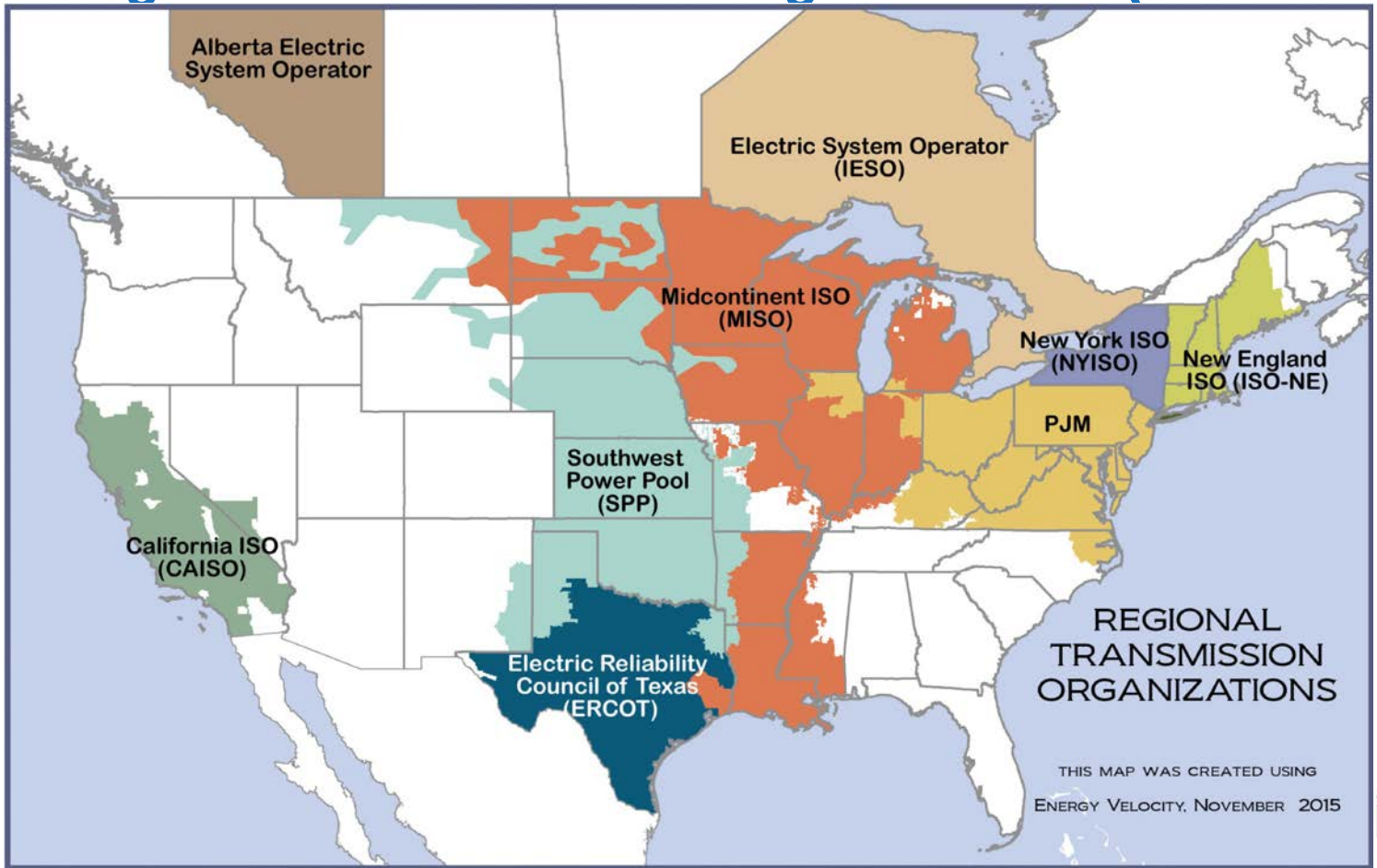

Alliant Energy

MISO Local Resource Zones

Local Resource Zone	Local Balancing Authorities
1	DPC, GRE, MDU, MP, NSP, OTP, SMP
2	ALTE, MGE, MIUP, UPPC, WEC, WPS
3	ALTW, MEC, MPW
4	AMIL, CWLP, SIPC
5	AMMO, CWLD
6	BREC, CIN, HE, IPL, NIPSCO, SIGE
7	CONS, DECO
8	EAI
9	CLEC, EES, LAFA, LAGN, LEPA
10	EMBA, SME

Area Control Error (ACE)

- Instantaneous difference between BAs net actual interchange and scheduled interchange
- Measures load-resource balance
- $ACE = (NI_A - NI_S) - 10B(F_A - F_S) - I_{ME}$
  - **NI_A** is the Net Interchange, Actual (sum of instantaneous flow between BA and Interconnections)
  - **NI_S** is the Net Interchange, Scheduled (sum of scheduled flow between BA and Interconnections)
  - **B** is the Balancing Authority Bias (BAs obligation to provide / absorb energy to assist in stabilizing frequency across BSE)
  - **F_A** is the Frequency, Actual
  - **F_S** is the Frequency, Scheduled
  - **F_A** is the Frequency, Actual
  - **I_{ME}** is the Interchange Metering Error (net outflow / inflow compared to BA is scheduled to be buying / selling)

Pseudo-Ties

- Real-time transfer of control of a generating unit or load from the “native” BA in which it is physically located to an “attaining” BA in a different location.
- Many generators pseudo-tied out of MISO are located in parts of territory where attaining BAs have limited ability to model their impact on the MISO transmission system.
  - Could cause attaining BAs to unknowingly/unintentionally overload MISO transmission when dispatching pseudo-tied unit physically located in MISO.
- MISO updated pseudo-tie process in 2016

ICCP – Inter-Control Center Communications Protocol

- International standard data exchange protocol
- Inter-utility real-time data exchange and historical data exchange
  - SCADA
  - Control data
  - Measured values
  - Operator messages
  - Status/data monitoring
  - Scheduling data
  - Energy accounting data

MISO Tie-Line Modeling Inputs

- **Location**
- **ID** (14 characters)
- **Description** (long common name – 60 characters)
- **TMW** measurement
  - Metered MW tie line measurement indicating flow at agreed metering location, from “primary” LBA party (MISO LBA)
- **TMW1** measurement
  - Metered MW tie line measurement indicating flow at agreed metering location, provided by Adjacent BA (non-MISO LBA, “secondary” party, counterparty)
- **MWh**
  - Hourly aggregated MW tie line measurement, provided by MISO LBA

KYZ Pulses

- Used to transmit instantaneous energy-use information from meter to another device
- KYZ interface includes two switch contacts: Y & Z
- Current toggles between two contacts
- This state-change is a ‘pulse’ and represents an amount of energy that has gone past the meter

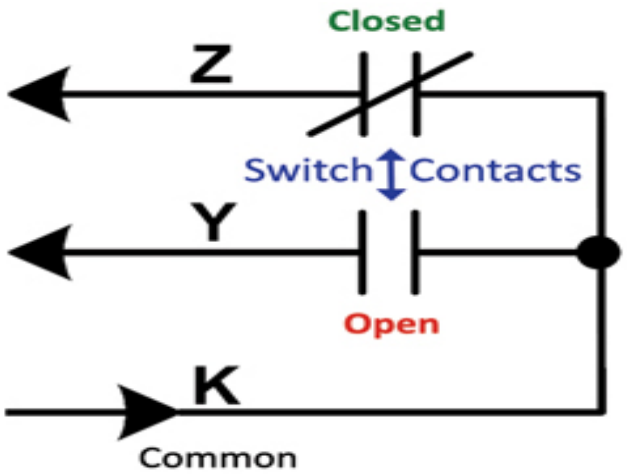

KYZ Pulses continued…

- Switching speed increases with energy use increase
- Typically given in kWh
- Can count pulses for energy (total kWh used) or time them for total demand (kW)
- Switches require whetting voltage

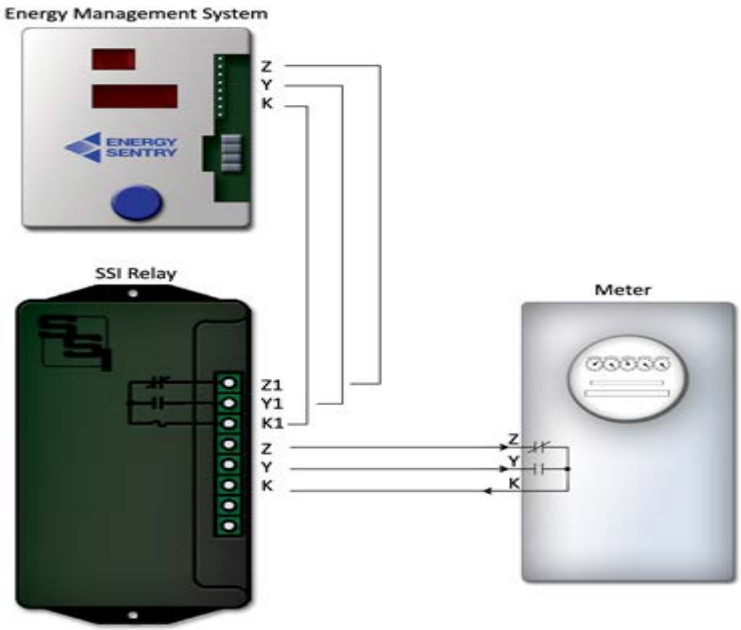

KYZ Pulses continued…

- SEL-735 produces KYZ pulses from OUT01 and OUT02
- Output contacts update every half power system cycle
- Outputs are programmable

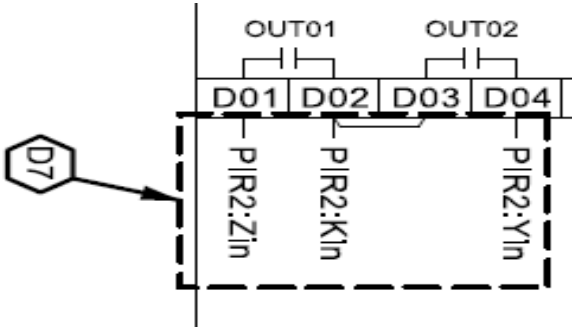

KYZ Pulses continued…

- Pulse Isolation Relay (PIR) or Device (PID)
  - Protect meter from transient damage
  - Provide multiple outputs to downstream devices
- Totalizing devices
  - Take multiple inputs from several devices and totalize the information into one output

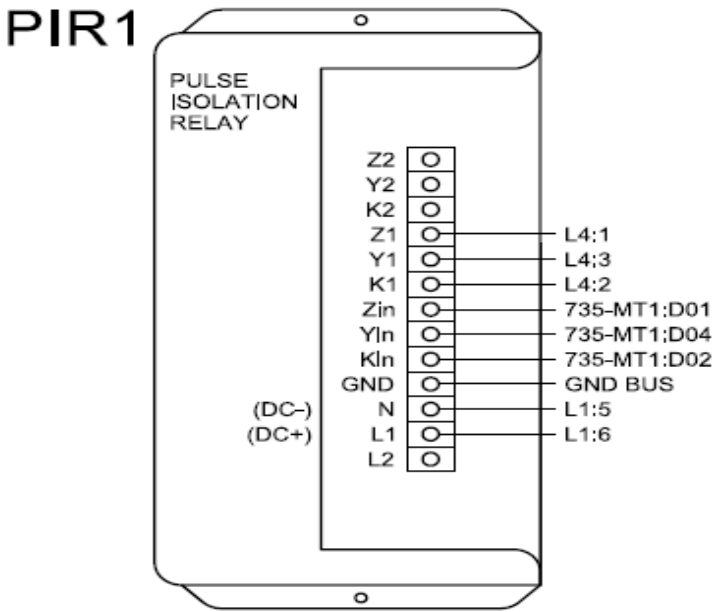

MISO History

- **1965-1968**
  - Northeast Blackout precipitates formation of NERC
- **April 1996**
  - FERC Orders 888/889 creates ISOs to provide non-discriminatory access to transmission
- **September 1998**
  - FERC accepts MISO organizational plan and initial transmission tariff

MISO History continued…

- **December 1999**
  - FERC Order 2000 encouraged voluntary formation of RTOs to administer transmission grid on regional basis
- **December 2001**
  - FERC approved MISO as first RTO in U.S.
  - Began reliability coordination, regional planning
- **February 2002**
  - FERC accepts MISO as transmission service provider

MISO History continued…

- **April 2005**
  - MISO establishes Energy Markets for administering tradable Financial Transmission Rights (FTRs)
- **January 2009**
  - MISO starts Ancillary Service Market (ASM)
  - MISO becomes authoritative BA coordinating 20+ LBAs